No.16207

14+

HYPER GO

1:16 RC HIGH SPEED CAR
USER MANUAL

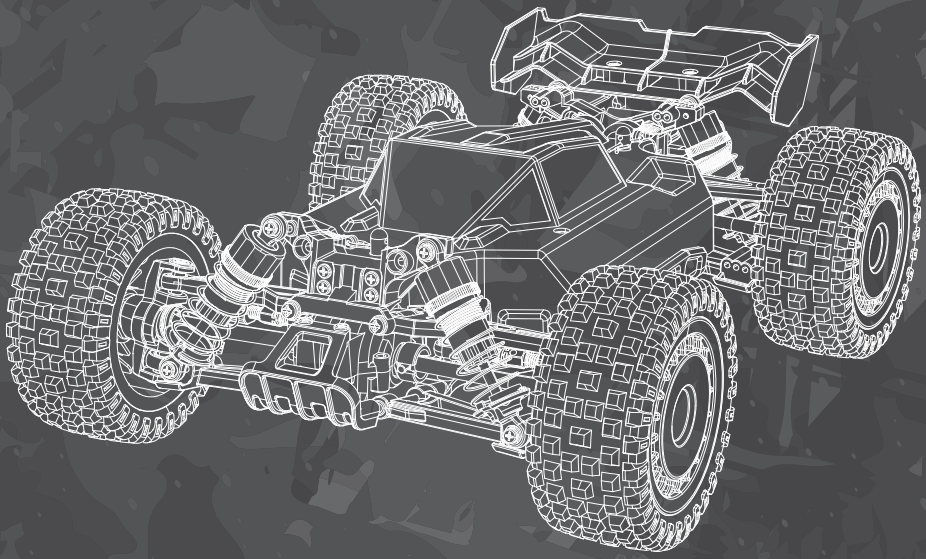

4WD
REMOTE CONTROL

The instruction sheet for this product is just for your reference. We reserve the right to make changes or adjustments on the product without prior notification. Please refer to the official information.

Warning:

Choking hazard! This product contains small parts. NOT suitable for children under 3 years. Contains electrical components and should be kept dry at all times. Regularly check the battery charger wires, plugs and shell and other components for damage. DO NOT use if any part is damaged.

Warnings & Cautions

1. Detachable small parts should be stored safely and out of reach of children.
2. If interference is experienced, turn the model off and try it again in a different area.
3. Transmitter will not function correctly if the batteries are low. Please replace the batteries.
4. Please discard old/used batteries in a safe manner. Consider your environment!
5. Please store the remote control model in cool, dry place.
6. DO NOT expose to fire or high temperatures, do not store in moist place.
7. Once the battery get wet, wipe immediately with a soft dry cloth.
   If the battery any deformation, please stop using.
8. If you don't use the model for a long time, please raise the chassis to let the wheels hang in the air.

Precautions for Battery Use

1. Transmitter uses 2x1.5V "AA" batteries.
2. Please pay attention to correct polarity when replacing batteries.
3. Rechargeable batteries should be charged under adult supervision.
4. Do not mix old and new batteries. Do not mix alkaline, standard (carbon-zinc), or rechargeable batteries.
5. After the battery is exhausted, the model should be removed.
6. Exhaust battery should be safety dispose!
7. DO NOT short circuit any terminals.
8. DO NOT attempt to recharge non rechargeable batteries.
9. Remove batteries from the model when charging.
10. DO NOT put batteries into a fire or into water.
11. The rated input voltage battery charger MUST be suitable for your mains power voltage.
12. During charging it is quite normal for the charger and batteries to heat up.
13. Do not swallow battery!
14. Store only in cool, dry and dark places and should be keep out of the children!
15. When the battery leaks the liquid and let it into you eyes, please right away rinse them and consult an ophthalmologist.

Safety Precautions

- It is a radio control model, not a toy!
- In order to enjoy running the car, you need to finish assembly before operation. Do routine maintenance work after operation. Replacement parts and option parts are available separately.
- Improper usage with Alkaline cells or rechargeable batteries may damage the electronics for the car or the radio.

In order to operate the car safely. Be sure that you have observed the following points:

⚠ Please follow the points as below in order to prevent accident from happening to the car and people.

●Be sure to read thoroughly the manual before you begin. Fresh user should seek advice from people having rich experience in order to assemble the model correctly.

●Cutters, nippers and screwdrivers need careful handling.

●As the product contains small and sharp parts, assemble and store this product only in places out of the reach of children.

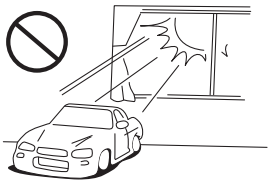

●Do not expose this model to high temperature, humidity or direct sunlight.

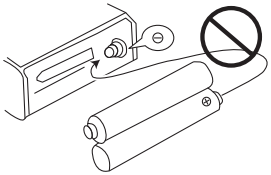

●Never reverse connection/ disassemble the battery. This may lead to damage and leakage.

●When the model is not in use, always turn off the receiver and transmitter. Further more, disconnect the batteries and remove them from the model and the transmitter. This may be dangerous such as overheat and leakage.

Operating Your Model Safely

⚠ Do NOT operate the model in the following places and situations.
(Non-observance may lead to accident!)

●Operate your model in spacious and safe areas! Do not operate it:

1. On road!
2. In places where children and many people gather.
3. In residential districts and parks!
4. Do not operate the model on public roads, in crowded places and near infant as it may cause accidents.
5. Indoors and in limited space! Non-observance may result in personal injury and property damage!

●The car must stop immediately and check for the reasons when it is operating abnormal.
As long as the problem is not cleared, do NOT operate it! This may lead to further trouble and unforeseen accidents!

●Always check the radio batteries!
With weak dry batteries, transmission and reception of the radio would fall off. You may lose control of your model in such condition. This may also cause serious accidents!

●Keep in mind that people around you may also operate a radio control model!
NEVER share the same frequency with somebody else at the same time! Otherwise, Radio signals will be mixed up and you will lose control to your model. This may lead to accidents.

●Do NOT put fingers or any objects inside rotating and moving parts!

●Right after use, do NOT touch the motor! Danger of burning yourself!

FCC PART 15 B Notice:
CAUTION

Warning: Changes or modifications to this unit not expressly approved by the party responsible for compliance could void the user's authority to operate the equipment.

NOTE: This equipment has been tested and found to comply with the limits for a Class B digital device, pursuant to Part 15 of the FCC Rules. These limits are designed to provide reasonable protection against harmful interference in a residential installation. This equipment generates, uses and can radiate radio frequency energy and, if not installed and used in accordance with the instructions, may cause harmful interference to radio communications.

However, there is no guarantee that interference will not occur in a particular installation. If this equipment does cause harmful interference to radio or television reception, which can be determined by turning the equipment off and on, the user is encouraged to try to correct the interference by one or more of the following measures:

- Reorient or relocate the receiving antenna.
- Increase the separation between the equipment and receiver.
- Connect the equipment into an outlet on a circuit different from that to which the receiver is connected.
- Consult the dealer or an experienced radio/TV technician for help.

This device complies with Part 15 of the FCC Rules. Operation is subject to the following two conditions:

(1) this device may not cause harmful interference, and

(2) this device must accept any interference received, including interference that may cause undesired operation.

Power Switch

1. Turn on the power switch of the transmitter, the signal indicator light of transmitter flashes.
2. Press the power button of high speed car, which is on the side of the ESC; the indicator light of high speed car flashes.
3. When the indicator light stays on, the high speed car can be operated to play.

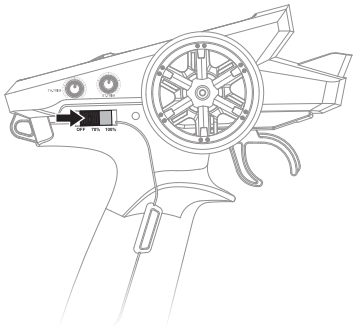

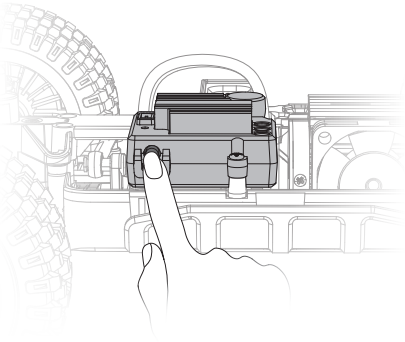

⚠
- When turn on the transmitter, please DO NOT touch the throttle and steering. After turn on the transmitter's power, please operate after the indicator light of transmitter staying on.
- Please comply the principle of "turn on the transmitter firstly, then turn on the high speed car''.
- In the frequency matching, please make sure there is only one pair of transmitter and high speed car in matching at the same time, otherwise the frequency will match wrongly.

R30 Receiver

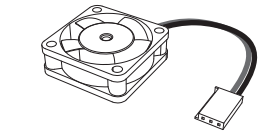

Fan
(VCC/FAN)

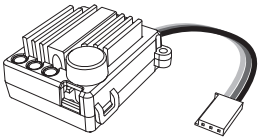

ESC
(CH2)

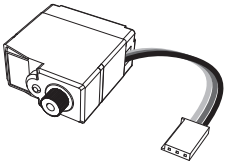

Steering
servo
(CH1)

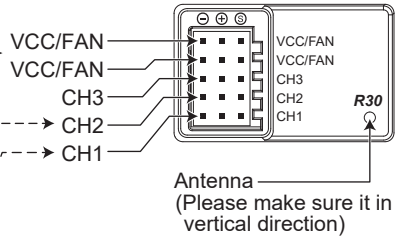

VCC/FAN: Power Interface (VCC=5-6V)

R30 Indicator situation	Meanings
Stays on	Signaled
Flashes	No Signal

⚠ Warning: Please make sure the connection is correct.

E45A Brushless ESC

⚠ Please Do Not forcible/reversely insert all sockets.

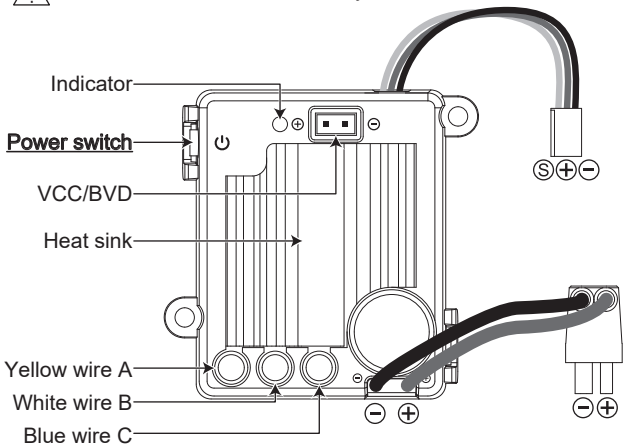

E45A Indicator light situation	Meanings
Stays on	Signaled
Flash quickly	a. No signal b. Pull the trigger
Flash slowly	Low voltage
Flash twice	Over heat protection
Off	Stuck protection

VCC: Powered by battery circuit. Please provide the same voltage as the connected battery. It can be used as cooling fan power power. Please make sure the battery voltage of the ESC is in the range of fan's.

BVD: Receivers with BVD function can be directly connected to this interface through an adapter cable, which is equivalent to connecting a battery.

T3B Transmitter

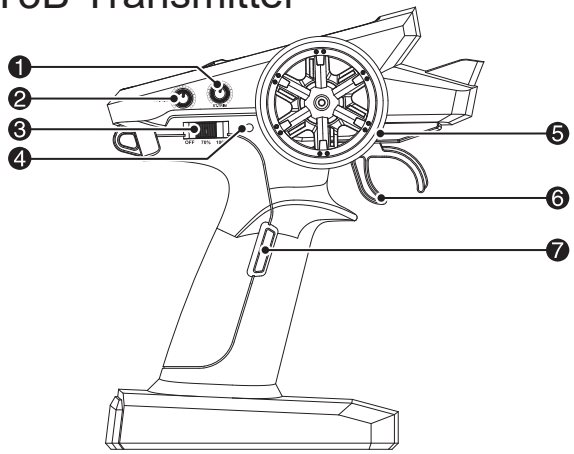

① ST.TRIM (Steering servo strimmer)

② TH.TRIM (Throttle trimmer)

③ Power switch (OFF-70%TH-100%TH)

④ Indicator light

⑤ CH1: ST (Steering)

⑥ CH2: TH (Throttle)

⑦ CH3: Fn

①ST.TRIM (Steering servo strimmer)

If the car cannot go straightly during driving, it can be adjusted through the ST.TRIM.

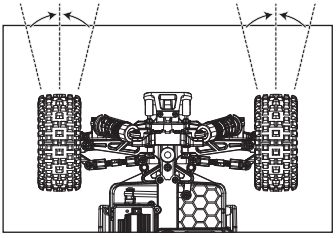

②TH.TRIM (Throttle trimmer)

If the car can't be stop when the TH in the middle place, you can adjust the button to stop the car.

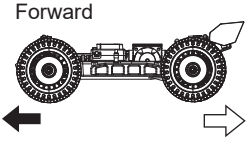

③Power/Speed switch

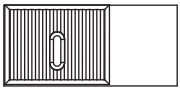

OFF 70% 100%

OFF 70% (70% Throttle) 100% (100% Throttle)

④Indicator light

Stays on	Working well
Flash quickly	Frequency mating
Flash slowly	Low battery of transmitter

⑤CH1: ST (Steering)

Middle

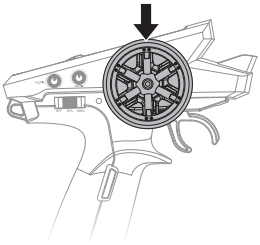

Turn left

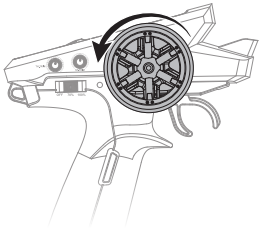

Turn right

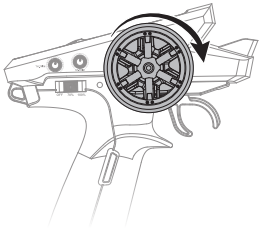

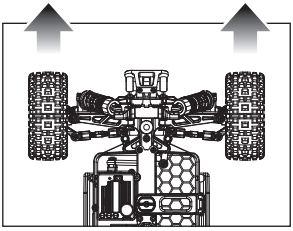

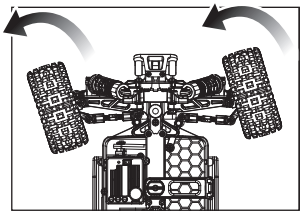

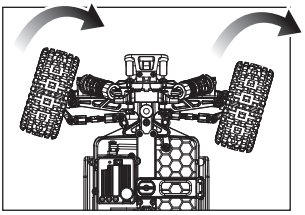

⑥CH2: TH (Throttle)

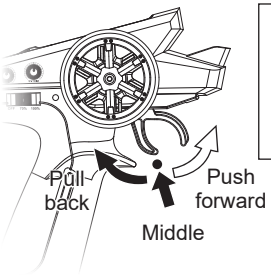

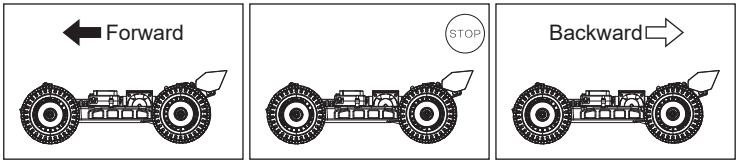

Brake: When the car is going forward, pull the transmitter trigger back, and the car enters into the braking state. After the trigger is in the middle, push back again, and the car can move backward.

*When the car is in reverse situation, it does not the brake function.

Install the Head Wheels

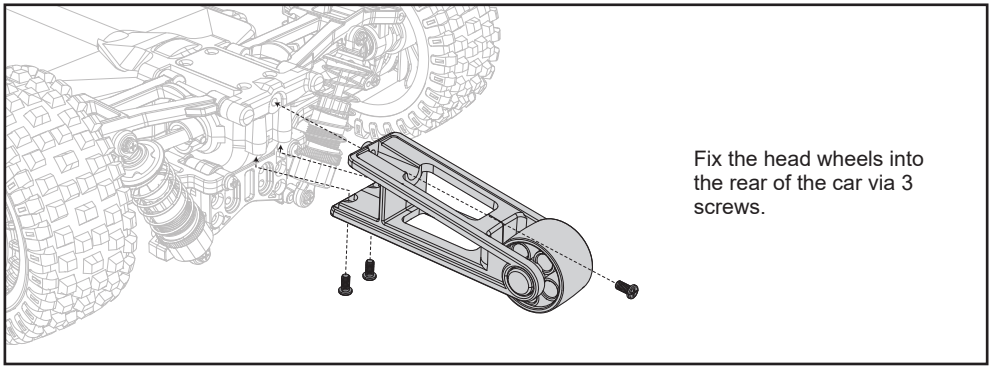

Install the Tail

Install the tail to the body, lock with 2 screws.

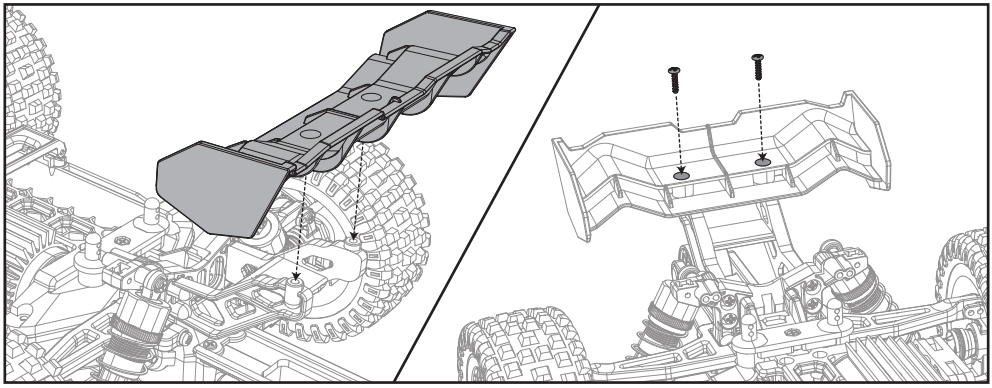

Install the Transmitter's Battery

Open the transmitter's battery cover, insert 2 AA batteries according to the indicated positive and negative direction, close the battery cover.

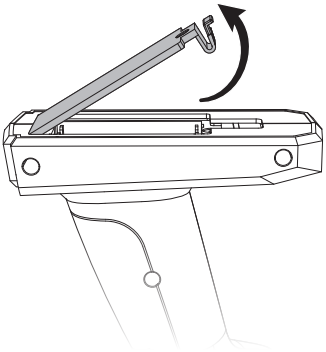

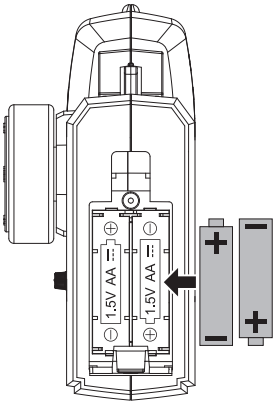

Install Battery and Charge Battery

Install the battery

①Turn the battery lock knob and flip up the cover;
②Connect the receiver plug to the battery;
③Put the battery into the battery holder and make sure it is in place;
④Flip back the cover and turn the knob to lock it.

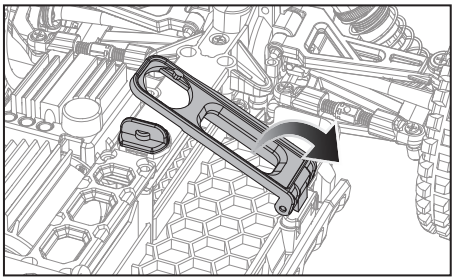

❶

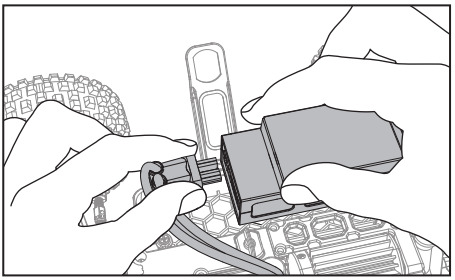

❷

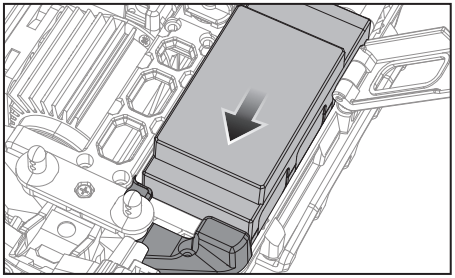

❸

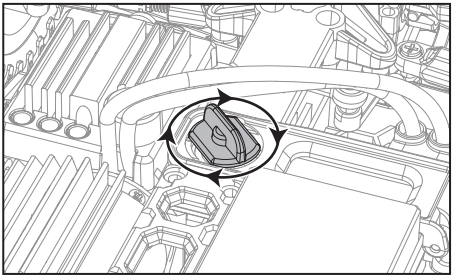

❹

Charge

High speed car battery: 11.1V 1050mAh 25C.
If charging with a 5V 2A USB adapter, the charging time is about 240 minutes.
●When charging, the indicator light of charger is green and flashes;
●When the battery is fully charged, the green indicator light of the charger stays on.
*The above charging time data is based on the test result of 5V 2A adapter. Using different specifications of adapters or power supply equipment will affect the actual charging time. It is recommended to use a 5V2A adapter for charging.

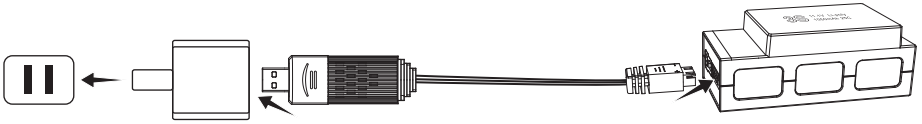

Adapter 5V2A
(Sold separately)

Install Car Shell

1. Aline the 3 holes of the car shell with holders, then install it.

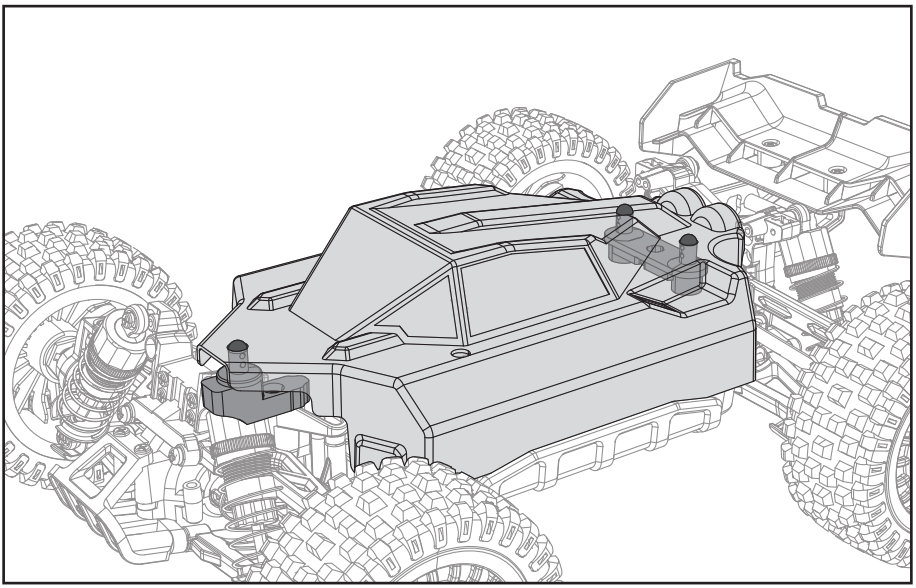

2. Insert the 3 clips into the holes to lock the car body.

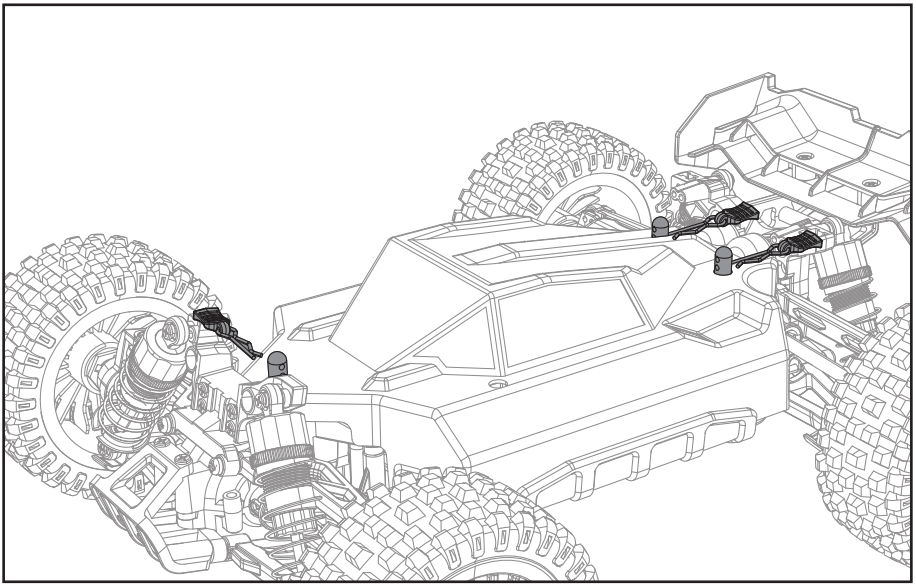

16200 Front Swing Set

Screw:

M26124 ∅2.6x12.5mm 2PCS

Countersunk flat head screws

16200

Bearing:

R168Z 2PCS

Ball bearing

Pivot balls:

Q1601 2PCS

Steering pivot balls

Q1601
16210
M26124
R168Z
16230
16220
R168Z
Q1601
M26124

16202 Rear Swing Set

Screw:

M23124 ∅2.3x12mm 1PCS

Countersunk flat head screws

Bearing:

R168Z 2PCS

Ball bearing

16202

Rear hub pins:

M2523 1PCS

Rear hub pins

Pivot balls:

Q1602 1PCS

Steering pivot balls

16240B
16260
R168Z
Q1602
R168Z
M23124
16250
M2523

16400 Metal Gears Main Driving Set

Bearing:

R168Z 2PCS

Ball bearing

R1810 2PCS

Ball bearing

Screw:

M21035 ∅2x10mm 1PCS

Countersunk flat head screws

16401
M21035
16405
16404
16403
16402
R168Z
R1810

16400

16420 Metal Gears Diff Assembly

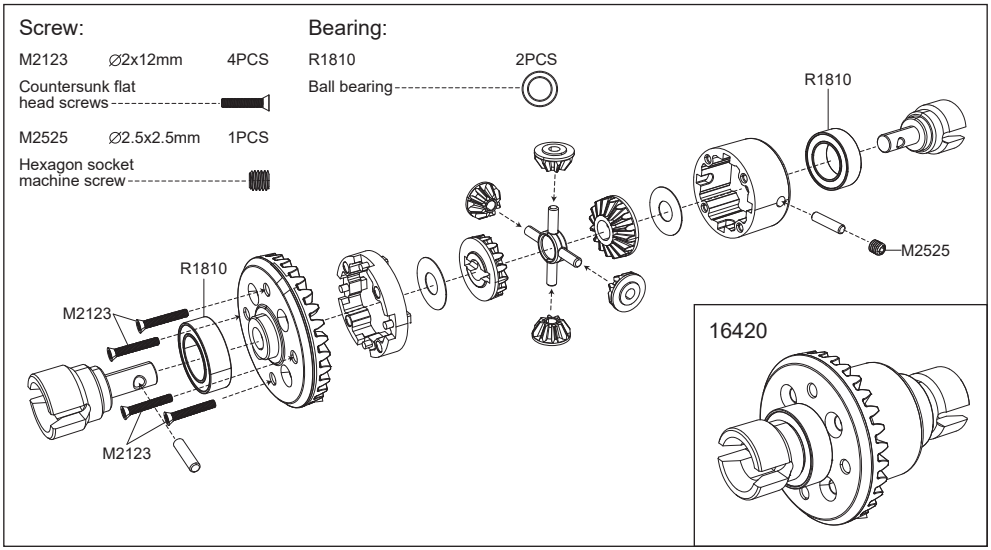

16700 Servo Assembly

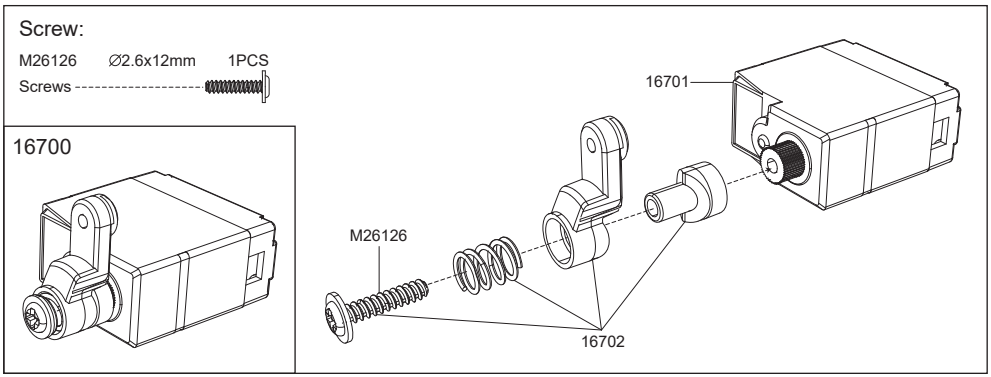

Metal Oil Filled Shocks

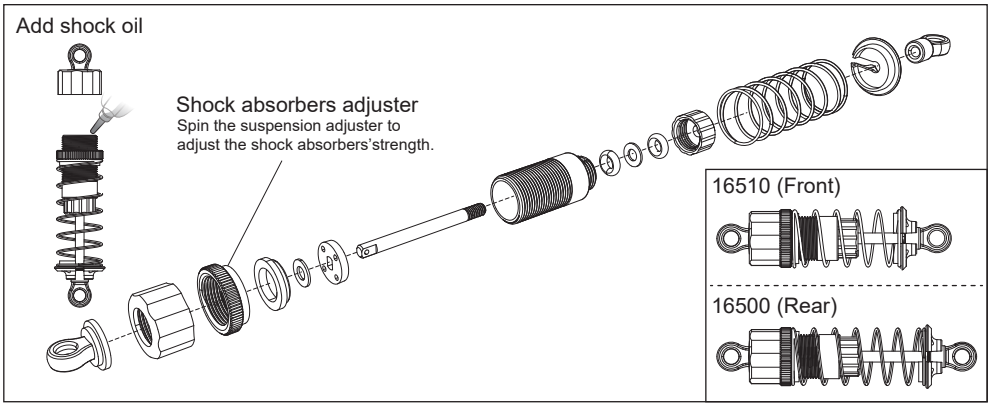

Motor Assembly

Screw:

M25845 ∅2.5x8mm 2PCS (16393)

Countersunk flat head screws

M3066 ∅3x6mm 2PCS (16393B)

Countersunk flat head screws

M31256 ∅3x12.5mm 2PCS

Machine screws

M3030 ∅3x3mm 1PCS

Hexagon socket machine screw

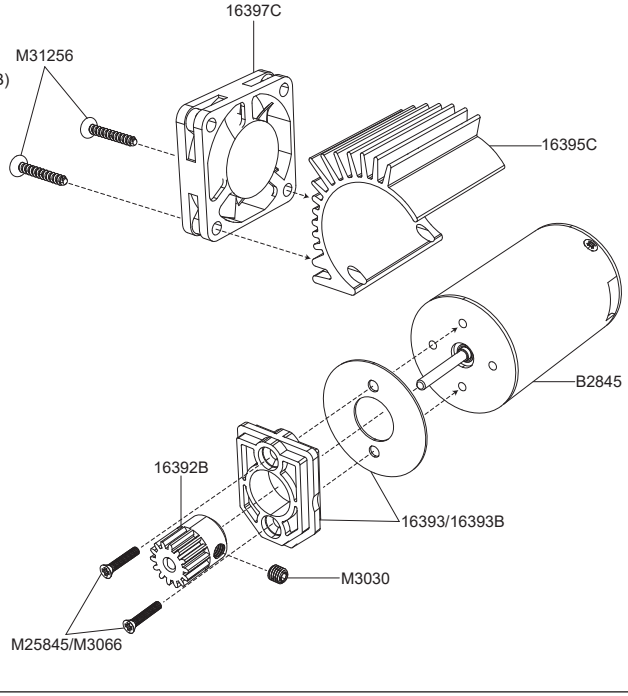

B284C & 16397C

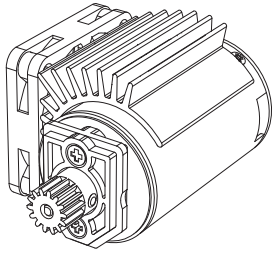

16430S Steering Assembly

Screw:

M23124 ∅2.3x12mm 3PCS

Countersunk flat head screws

M2665 ∅2.6x6.5mm 2PCS

Step flat screws

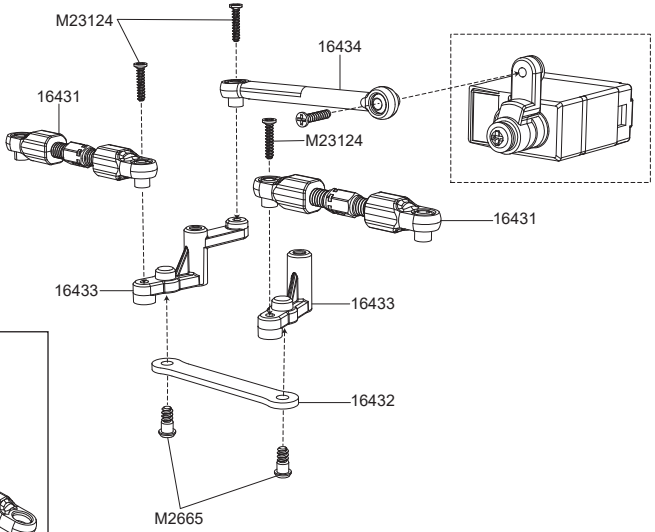

16430S

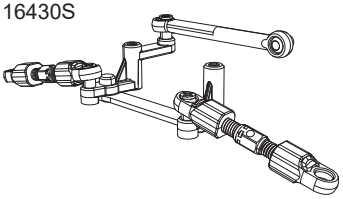

High Speed Car Assemble

Screw:

M2384 ∅2.3x8mm 4PCS
Round head screws

M2664 ∅2.6x6mm 2PCS
Round head screws

M26104 ∅2.6x10mm 10PCS
Round head screws

M23104 ∅2.3x10mm 6PCS
Round head screws

M2684 ∅2.6x8mm 4PCS
Round head screws

M23114 ∅2.3x11mm 1PCS
Countersunk flat head screws

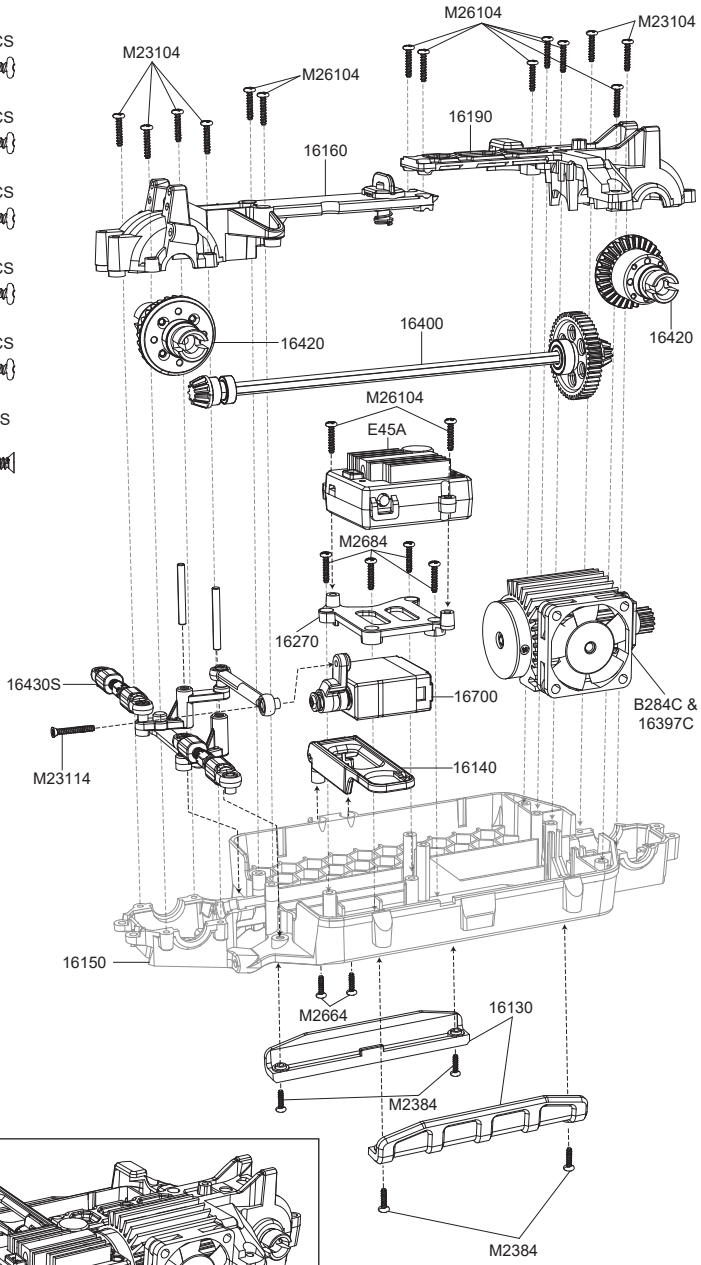

High Speed Car Assemble

Screw:

M23124 ∅2.3x12mm 1PCS (2PCS)
Countersunk flat head screws

M3294 ∅3x29mm 4PCS
Round head half thread screws

M26154 ∅2.6x15mm 1PCS
Countersunk flat head screws

M23104 ∅2.3x10mm 4PCS
Round head screws

M2684 ∅2.6x8mm 6PCS
Round head screws

M26104 ∅2.6x10mm 4PCS
Round head screws

Iron shaft:

M25425 4PCS
Lower swing arm fixed shaft

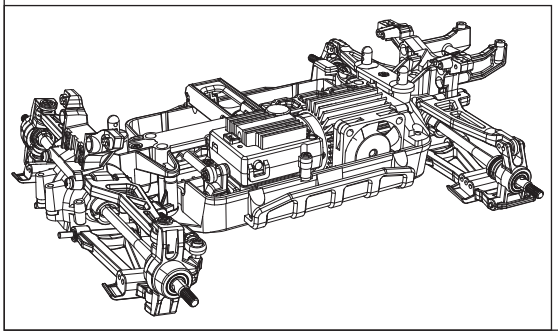

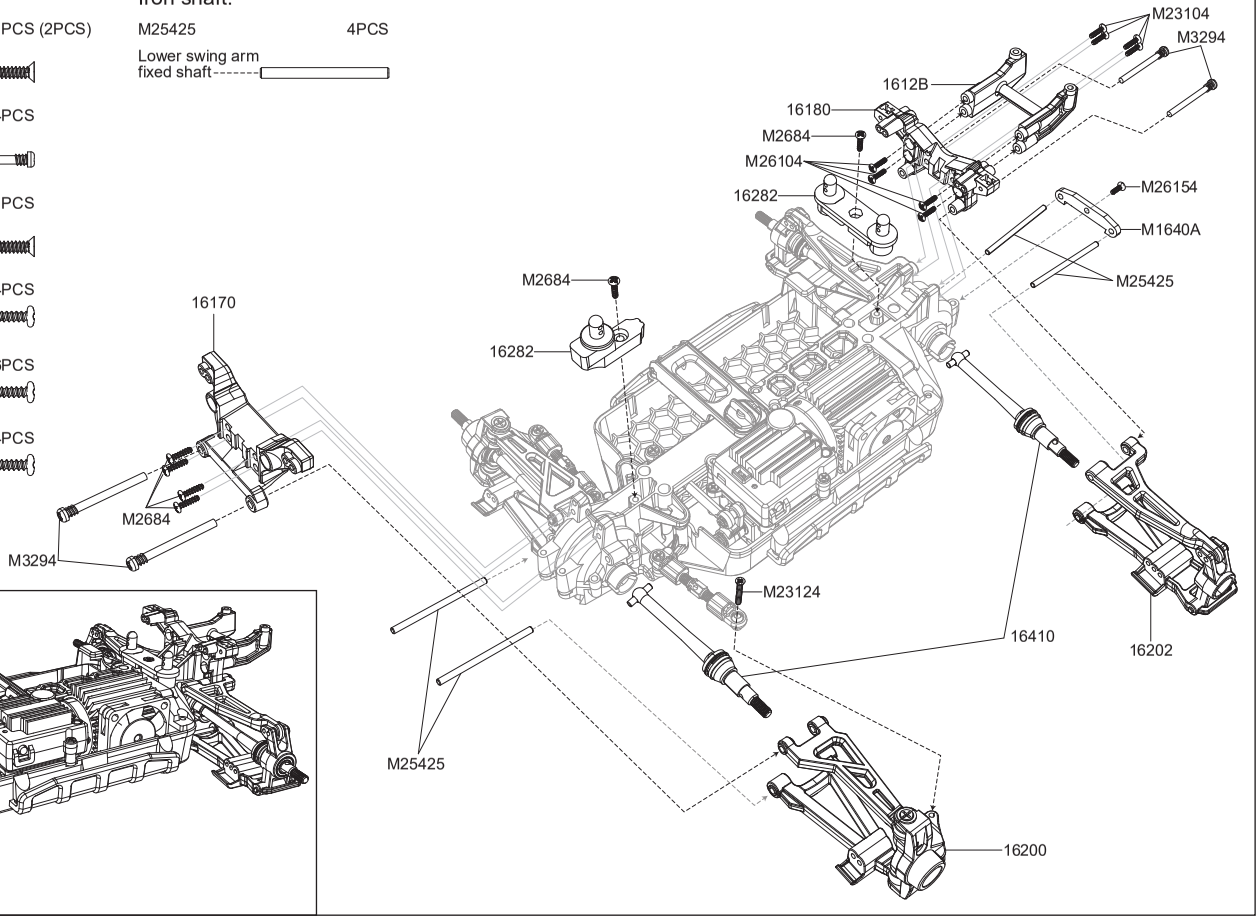

High Speed Car Assemble

Screw:

M23124 ∅2.3x12mm 4PCS (8PCS)

Countersunk flat head screws

M2684 ∅2.6x8mm 2PCS

Round head screws

M26645 ∅2.6x6mm 6PCS

Countersunk flat head screws

M26154 ∅2.6x15mm 2PCS

Countersunk flat head screws

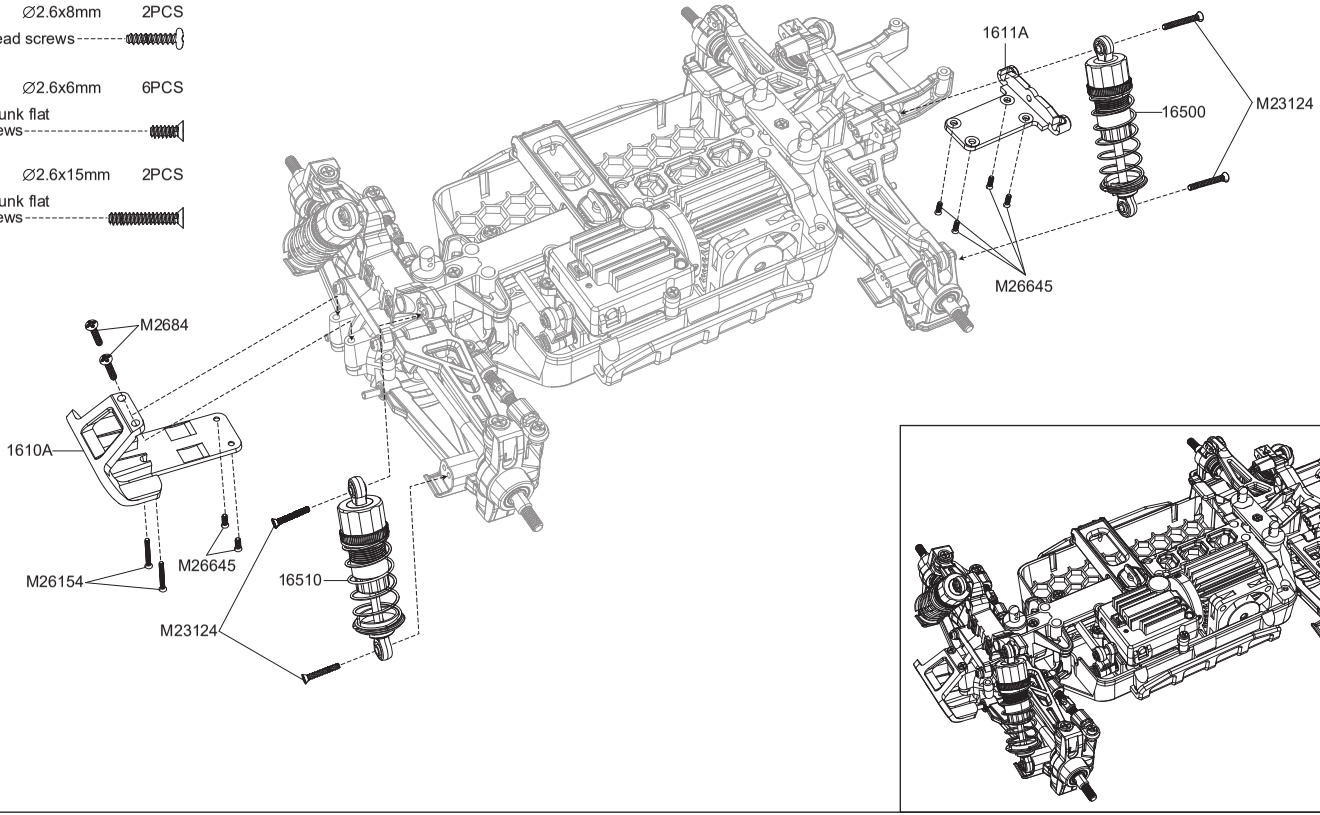

High Speed Car Assemble

Iron shaft:

M20101 1PCS (4PCS)

Wheel hex pins

16440 1PCS (4PCS)

Wheel hex

Nut:

M40 1PCS (4PCS)

M4 Wheel lock nut

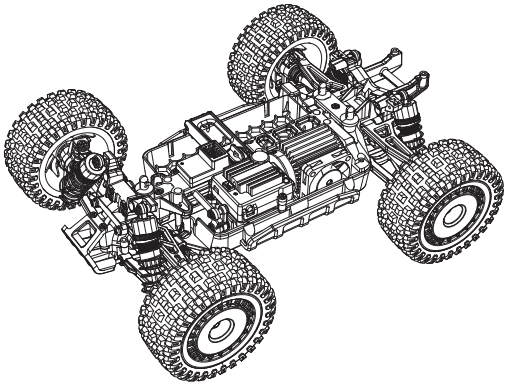

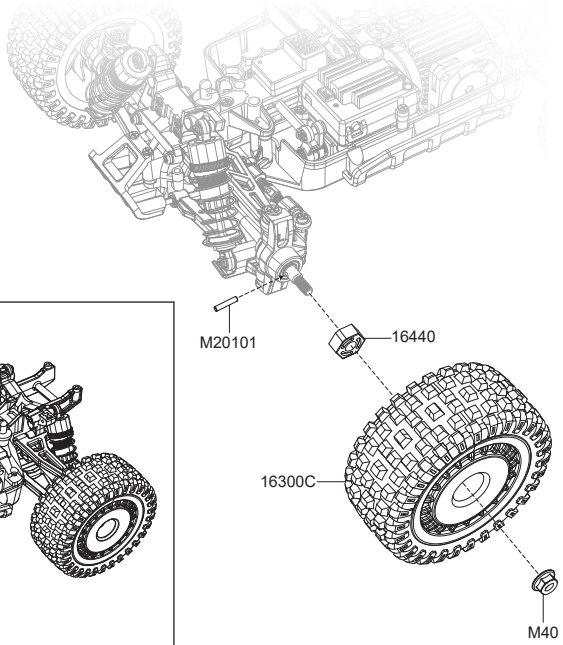

Spare Parts

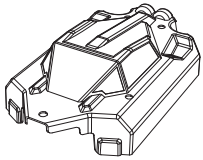	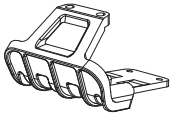	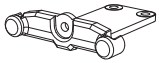	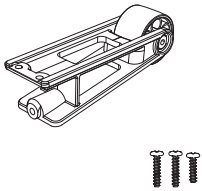
1601G Body	1610A Front Bumper Assembly (Metal)	1611A Rear Bumper (Metal)	16120S Wheelie Bar Assembly
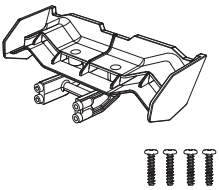	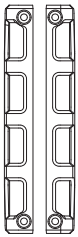		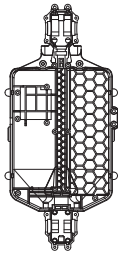
1612B Tail	16130 Chassis Parts	16140 Battery Clip	16150 Chassis
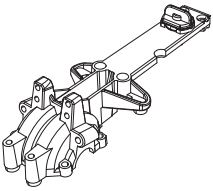	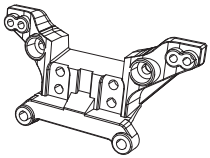	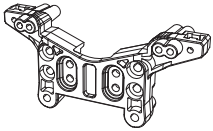	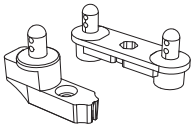
16160 Front Upper Gearbox Covers	16170 Front Shock Tower	16180 Rear Shock Tower	16282 F/R Body Pillars
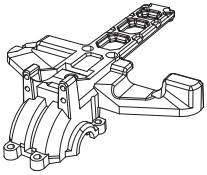	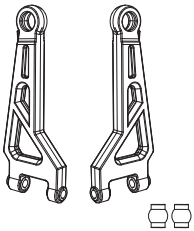	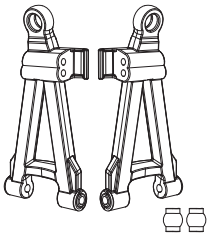	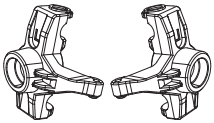
16190 Rear Upper Gearbox Covers	16210 Front Upper Suspension Arms (Including Ball Head)	16220 Front Lower Suspension Arms (Including Ball Head)	16230 Steering Block

Spare Parts

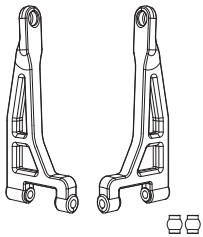	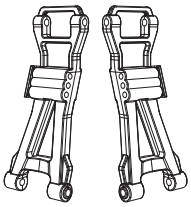	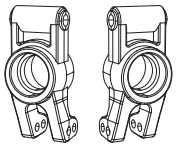	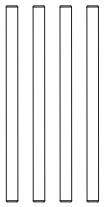
16240B Rear Upper Suspension Arms (Including Ball Head)	16250 Rear Lower Suspension Arms	16260 Rear Hubs	M25425 F/R Lower Suspension Arms Hinge Pins
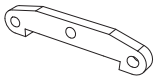	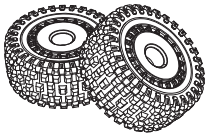	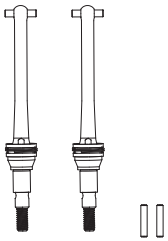	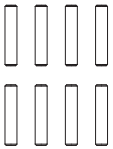
M1640A Rear Reinforced Sheet	16300C Wheel Assembly (2PCS)	16410 Metal F/R CVD Shafts (2 Sets)	M20101 Wheel Hex Pins (8PCS)
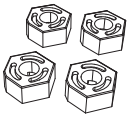	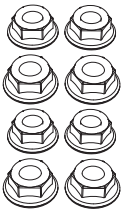	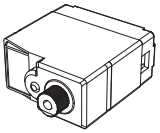	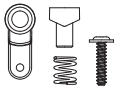
16440 Wheel Hex	M40 M4 Wheel Lock Nut (8PCS)	16701 Servo	16702 Servo Saver Assembly
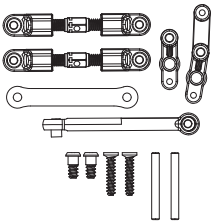	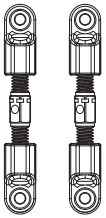		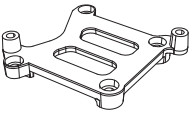
16430S Steering Assembly	16431 Steering Linkage (2PCS)	16432 Connecting Rod	16270 ESC/REV Fix Frame

Spare Parts

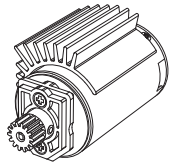	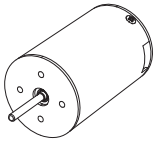	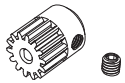	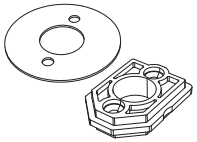
B284C Motor Assembly	B2845 Brushless Motor	16392B Motor Pinions	16393/16393B Motor Guard
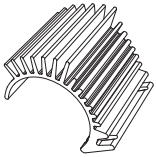	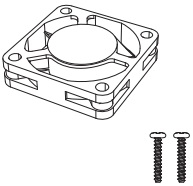	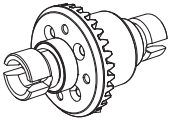	
16395C Motor Heatsink	16397C Motor Fan	16420 Metal Gears Diff Assembly	16400 Metal Gears Main Driving Set
			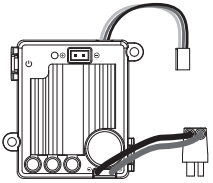
16401 Spur Gear Assembly (Metal)	16402 Drive Gear (Metal)	16403 Centre Drive Shaft	E45A Brushless ESC ESC
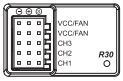	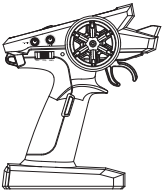	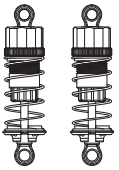	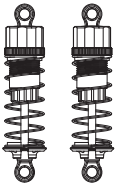
R30 Receiver	T3B Transmitter	16510 Metal Oil Filled Shocks (Front)	16500 Metal Oil Filled Shocks (Rear)

Spare Parts

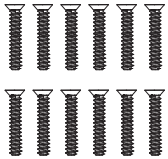	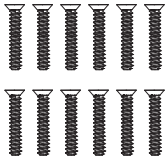	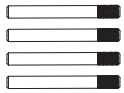	
M26124 Countersunk Flat Head Screws (12PCS)	M23124 Countersunk Flat Head Screws (12PCS)	M2523 Rear Fixing Pin (4PCS)	M26364 Step Flat Screws (12PCS)
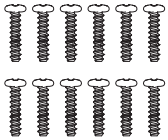			
M2384 Round Head Screws (12PCS)	M2664 Round Head Screws (12PCS)	M26104 Round Head Screws (12PCS)	M23104 Round Head Screws (12PCS)
		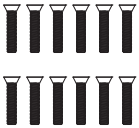	
M2684 Round Head Screws (12PCS)	M26645 Countersunk Flat Head Screws (12PCS)	M25845 Countersunk Machine Screws (12PCS)	M3066 Countersunk Machine Screws (12PCS)
R1810 Ball Bearing (8PCS)	R168Z Ball Bearing (8PCS)	Q1601 Steering Pivot Balls (8PCS)	Q1602 Steering Pivot Balls (8PCS)

Spare Parts

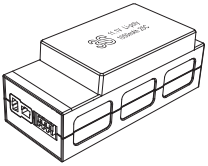	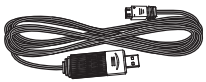	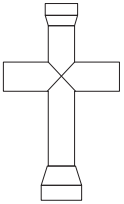	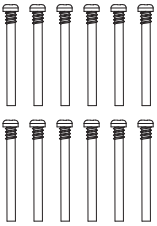
B3105 Battery	P3050 USB Charging Cable	P812 Hexagonal Wrench	M3294 Round Head Half Thread Screws (12PCS)
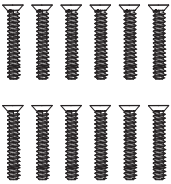	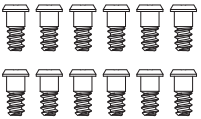	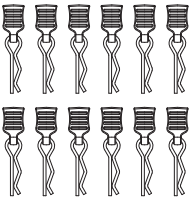	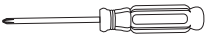
M26154 Countersunk Flat Head Screws (12PCS)	M2665 Step Flat Screws (12PCS)	M001 Body Clips (12PCS)	P810 Screwdriver

MADE IN CHINA

Instructions must be retained since it contains important information.